DO NOT SCALE

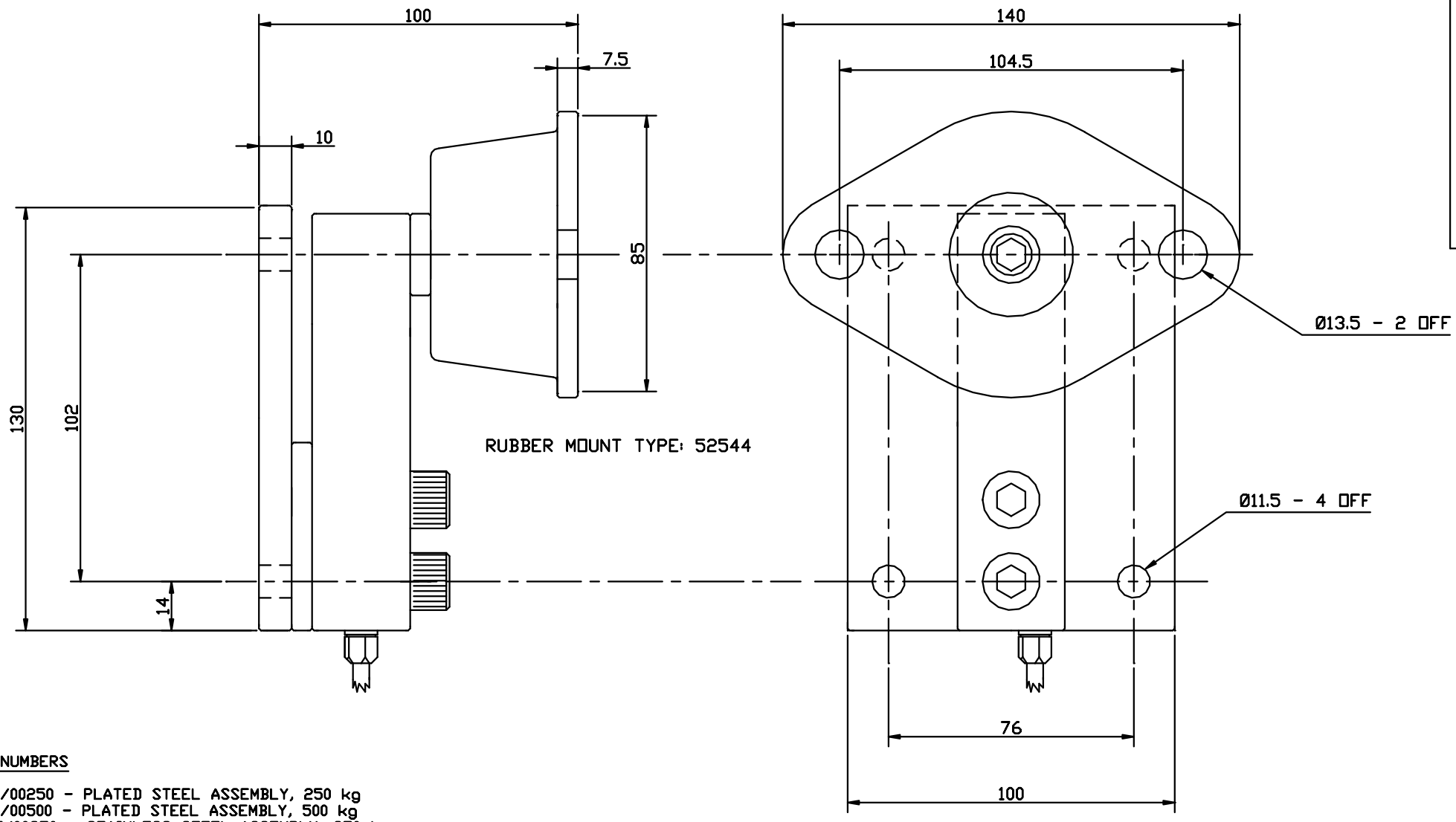

DRG. No. OL 02580

PART NUMBERS

AW331/00250 - PLATED STEEL ASSEMBLY, 250 kg
AW331/00500 - PLATED STEEL ASSEMBLY, 500 kg
AW337/00250 - STAINLESS STEEL ASSEMBLY, 250 kg
AW337/00500 - STAINLESS STEEL ASSEMBLY, 500 kg

ISS.	DATE	DCN	NOTE
2	04-04-2000		CAP SCREW DETAIL ADDED
1	27-05-98		

SCALE	UNITS	TOLERANCE	DRAWN	CHECKED	APP'D
NTS	MM	±0.2 / ±1°	J.Treacy		

STAINLESS ULTRA ACT LOADING ASSEMBLY 250/500kg

DRAWING No. OL 02580